Plan View Elevation - Roadside Range Type J

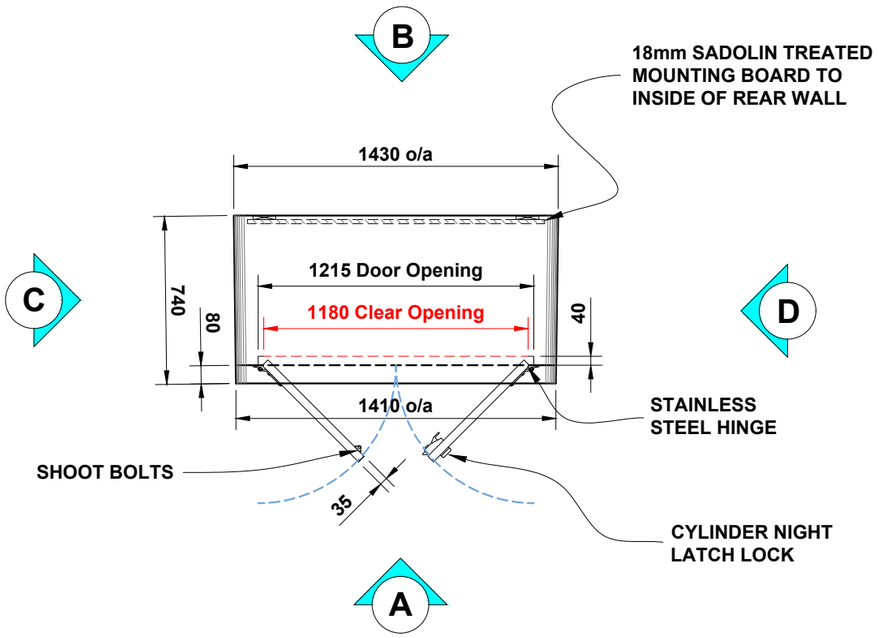

Elevation (A) *(front)*

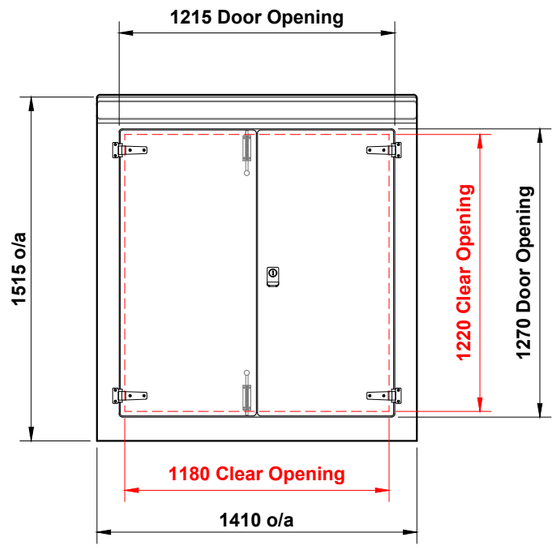

Elevation (B) *(rear)*

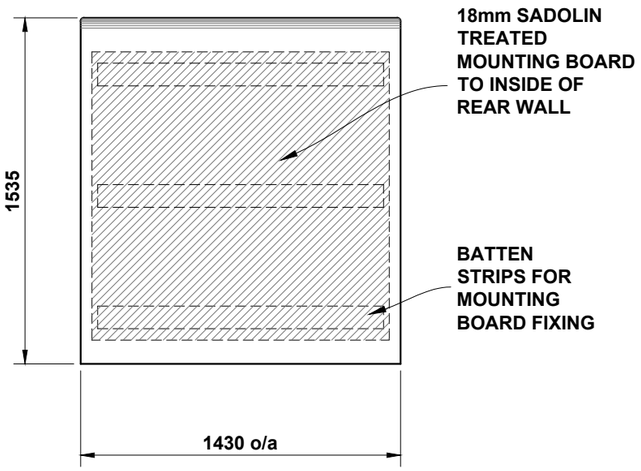

Elevation (C) *(l/h side)*

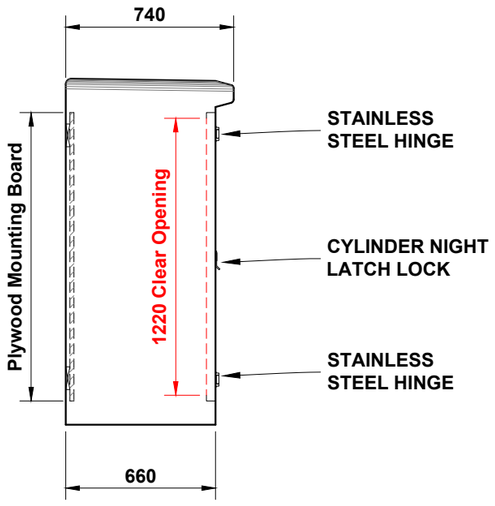

Elevation (D) *(r/h side)*

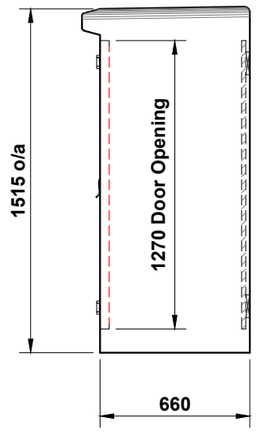

Elevation (C) *(l/h side)* *Door Open*

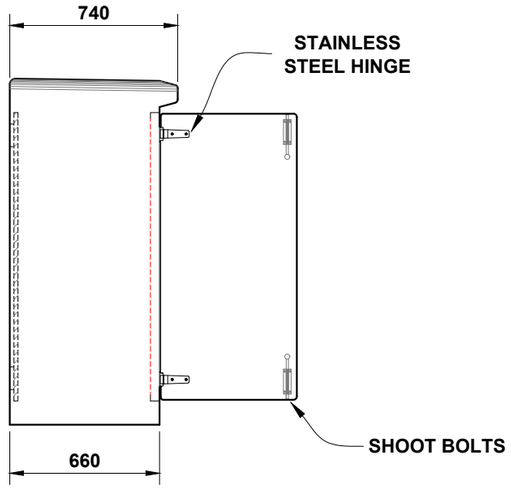

Elevation (D) *(r/h side)* *Door Open*

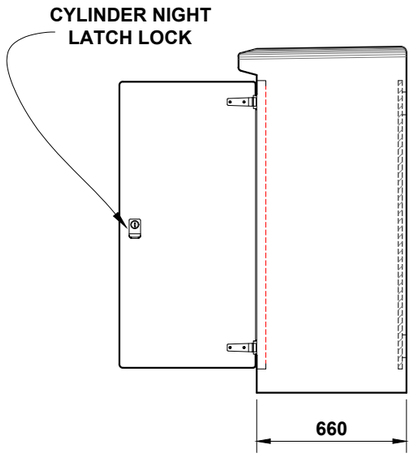

Envico Engineering Ltd

THE DRAWING AND DESIGN IS THE PROPERTY OF ENVICO ENGINEERING LTD. AND WITHOUT THE WRITTEN CONSENT OF ENVICO ENGINEERING LTD. MAY NOT BE COPIED IN WHOLE OR IN PART OR COMMUNICATED TO A THIRD PARTY OR USED FOR ANY PURPOSE. ©

Envico Engineering Limited
Tel : 01792 794 619
Fax : 01792 793 532
Nantyffin Road (South), Enterprise park, Llansamlet
Swansea, SA7 9RG, South Wales.

INTERNAL WIDTH : 1390mm	APPROX. WEIGHT : 95kg	GRP HOUSING : ROADSIDE RANGE TYPE J
INTERNAL DEPTH : 605mm	Date : 18/02/2019	Drawing Scale : Not To Scale
INTERNAL HEIGHT : 1465mm	Drawn By : D O`Malley	Drawing No : TYPE J / Rev :